PAAM

NEEDLE VALVE

Mini Series

Catalogue No. NV-MV-1
June 2003.

Mini Valves

PANAM Mini Needle Valves are specially designed and ruggedly manufactured for use in corrosive & hazardous environment. These valves are excellent for both throttling and straight isolation in process and flow control application.These Valves are precision machined, designer durability and maximum efficiency to provide high quality and low cost alternatives in fluid and gaseous control systems of different applications, to meet the exacting standards of our growing and demanding customers.

PANAM Mini Valves are available in High Grade Stainless Steel, Carbon steel, Brass and Monel materials in variety of end connections includes Male / Female threaded NPT, BSP, BSPT and ISO tapered / Straight threaded pipe ends. Valves can be supplied to meet current revision of NACE MR-01-75 (Sour Gas Service).

Features-Benefits

Vee tip design - Controls accurate flow.

Stem threads Rolled & Hard Plated - Provides additional strength & maximum service life.

Mirror Finish Stem, burnished to a 16RMS - Extends packing life and smooth stem operation

Fully Supported Packing - Reduces need for adjustment.

Packing Nut - Easy and fast to move external adjustment.

Stainless Steel Handle - For proper actuation.

Dust Cap - Prevents contaminants and lubricant washout of bonnet assembly.

Material of Construction

Sr No.	Part	Qty.	Material
1	Body	1	A479-316 / A-105
2	Gland Body	1	A479-316 / A-105
3	Pannel Nut	1	A479-316 / A-105
4	Gland Nut	1	A479-316 / A-105
5	Washer	1	A479-316 / A-105
6	Packing	1	PTFE/Graphoil
7	Packing Washer	1	A479-316
8	Spindle	1	17-4PH
9	Handle	1	Stainless Steel
10	Grub Screw	1	Steel Plated
11	O-Ring	1	Viton

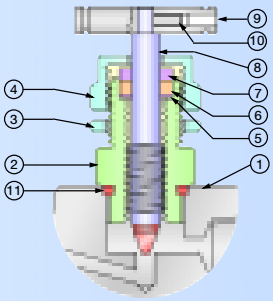

Dimensions

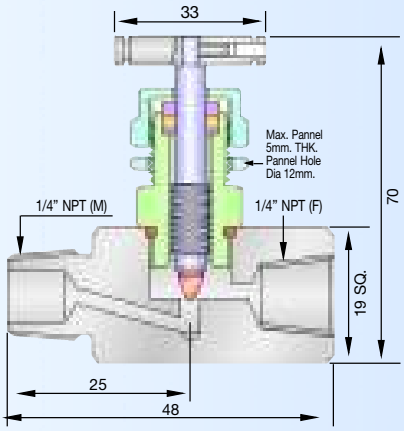

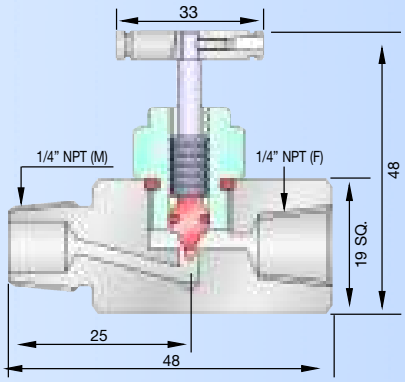

Pressure/Temperature Ratings:-

Orifice	Cv	Pressure Rating	Temperature Rating
3.5mm.	0.31	3000 PSI (20700kpa)	-20° to 250°F (-29° to 121°C)

Standard Testings

Every ***PANAM*** Mini Needle Valve is 100% tested with nitrogen gas at 1200psig (80 Bar) for leakage at seal & seat. Hydrostatic test performed with pure water at $1\frac{1}{2}$ times of the working pressure. Other optional tests like helium and temperature are available upon request.

* all drawings are not to scale and are for reference only * Specification are subject to change without prior Notice

PANAM ENGINEERS
AN ISO 9001:2000 COMPANY
412, Hingkee Building, 4th Floor, 155/157 Samuel Street, Mumbai-400 009. INDIA • Tel.: 91-22-2345 4582/4425 • Fax: 91-22-2347 6619.
E-mail: sales@panamengineers.com • Website: www.panamengineers.com